FRONT ELEVATION

SCALE 1/4"=1'

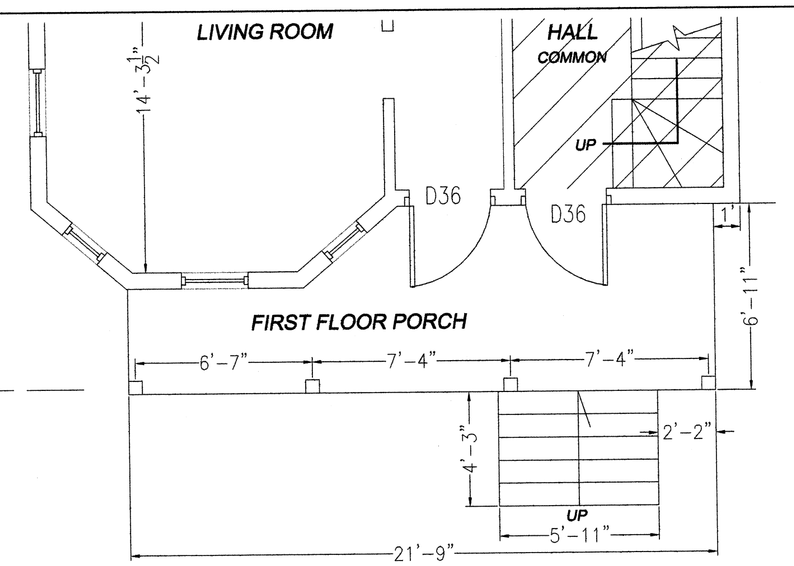

REPLACE FIRST FLOOR PORCH

SCALE 1/4"=1'

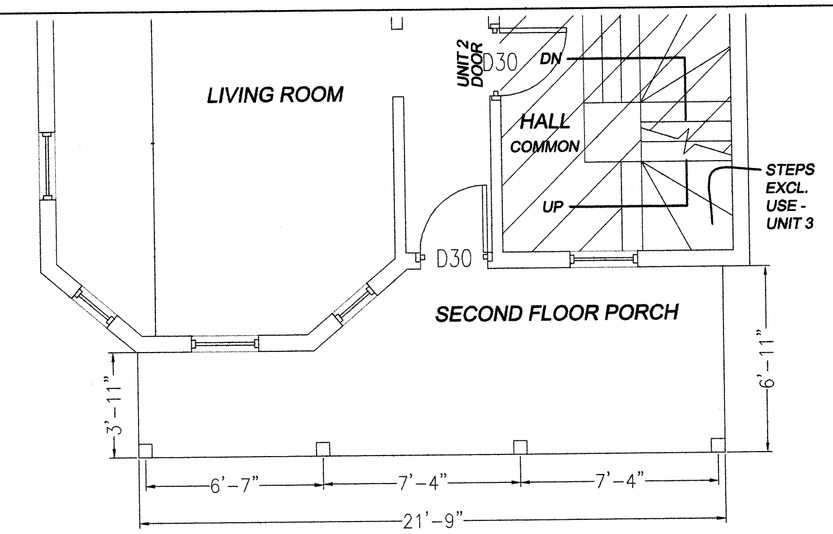

PROPOSED SECOND FLOOR PORCH

SCALE 1/4"=1'

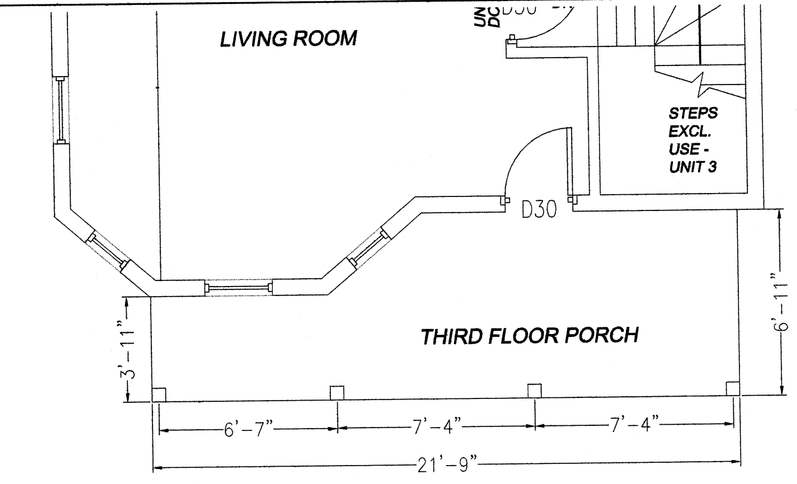

PROPOSED THIRD FLOOR PORCH

SCALE 1/4"=1'

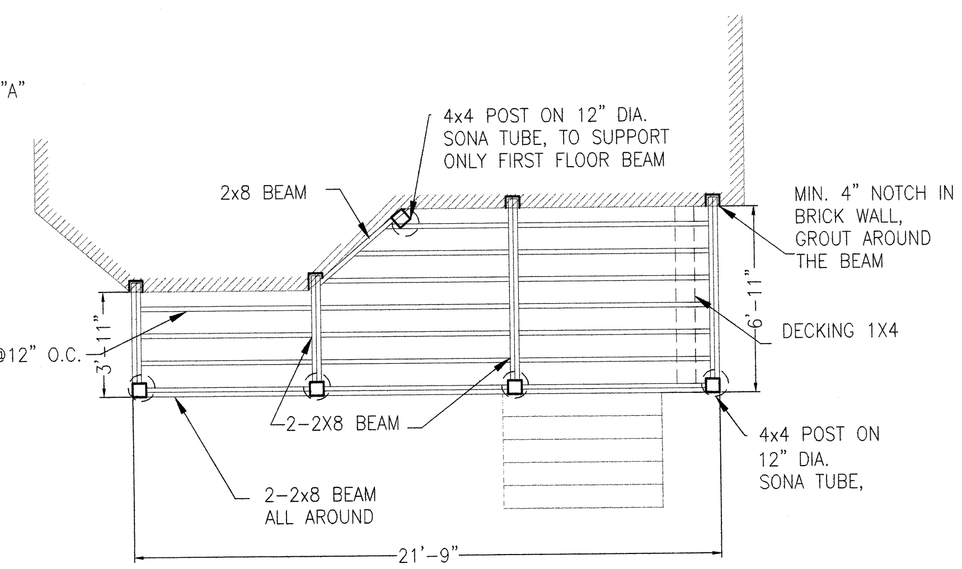

FIRST FLOOR PORCH FRAMING

SCALE 1/4"=1'

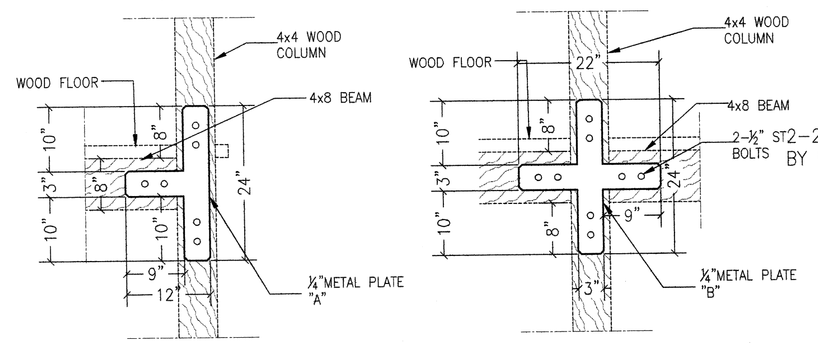

CONNECTIONS DETAIL

NOT TO SCALE

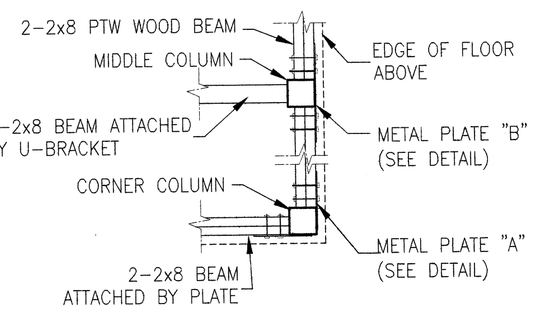

SECTION A-A

NOTE: DEMOLISH THE EXISTING FIRST FLOOR PORCH, AND REBUILD EXACTLY ON THE SAME FOOT PRINT WITH NO CHANGE IN DIMENSIONS.

NOTES: PROPOSED NEW PORCHES ARE OF THE SAME SIZE AND LOCATION OF THE ORIGINAL PORCH IN THE FIRST FLOOR.

1. ALL STRUCTURAL FRAME WOOD SHALL BE PRESSURE TREATED.
2. DECKING SHALL BE 1"X4" MERANTI OR SIMILAR.
3. CALL DIG SAFE FOR ALL DIGGING.
4. RAILING SHALL BE 42" HIGH, AND 4" O.C.
5. VERIFY ALL DIMENSIONS.
6. ALL CONSTRUCTION SHALL COMPLY THE CURRENT STATE AND CITY STANDARDS, FOLLOW BUILDER SPECS.
7. ENTRANCE TO 2ND & 3RD DECKS MAY VARY.
8. ALL DECKS SHALL BE ABOUT 6 INCHES BELOW THE FLOOR LEVEL.
9. MEASURE THE HEIGHT EXACTLY AND ADJUST THE DECK LEVELS.
10. ALL FLOOR JOISTS SHALL BE ATTACHED TO PERIMETER BEAMS BY SIMPSON'S STEEL JOIST HANGER BRACKETS.
11. ALL WORK SHALL BE DONE BY LICENSED CONTRACTOR IN THE TRADE.
12. PORCHES ARE DESIGNED FOR A LOADING OF 100 POUNDS PER SQUARE FOOT.
13. ALL LUMBER DIMENSIONS ARE NOMINAL.

SECOND FLOOR PORCH FRAMING

SCALE 1/4"=1'

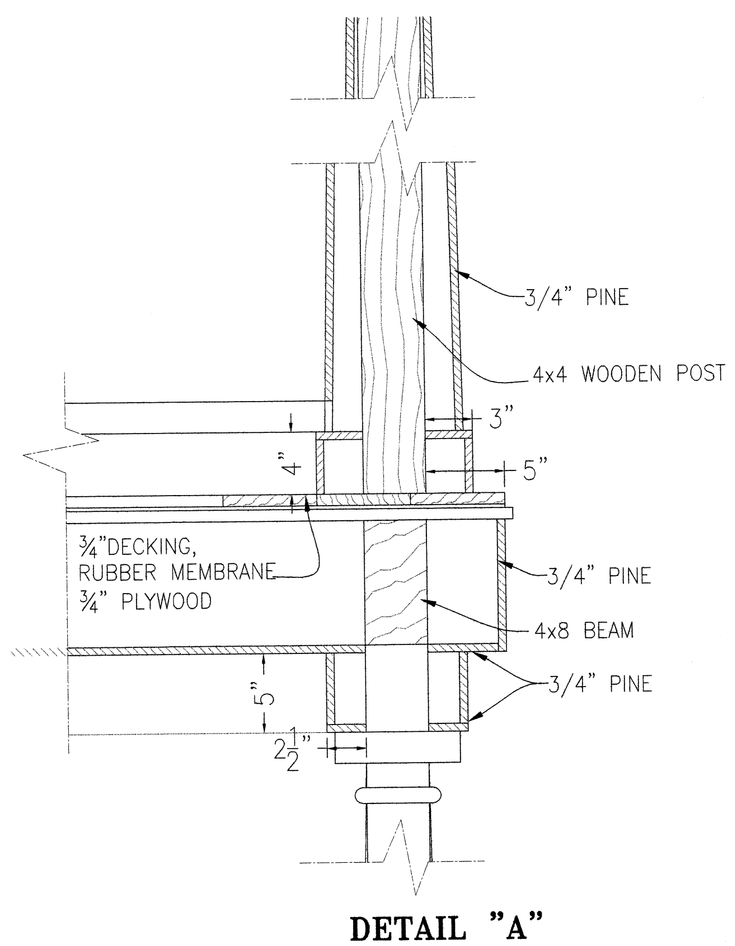

DETAIL "A"

NOT TO SCALE

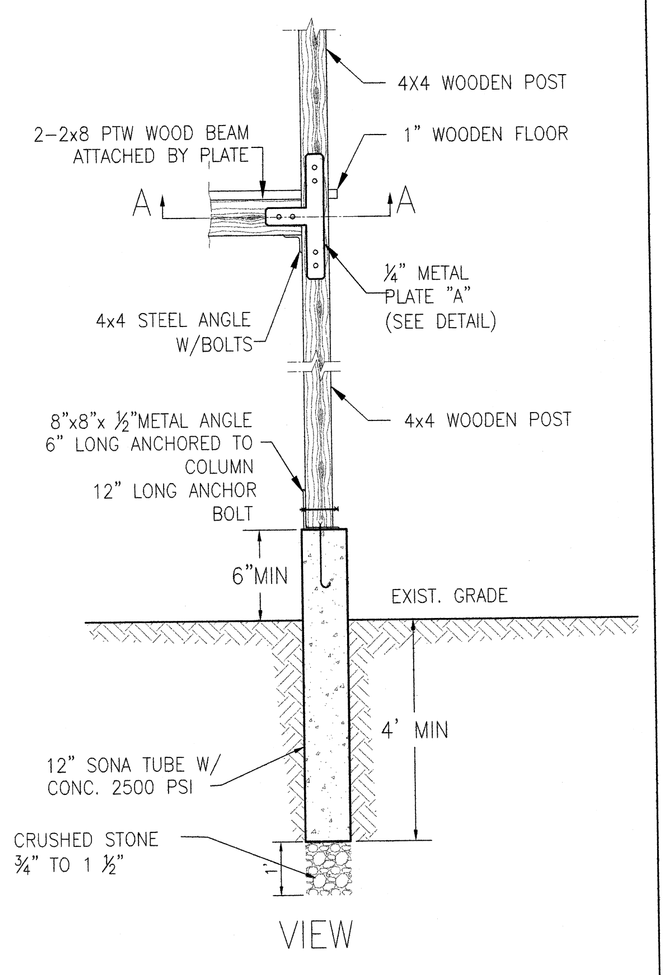

VIEW

POST DETAIL

NOT TO SCALE

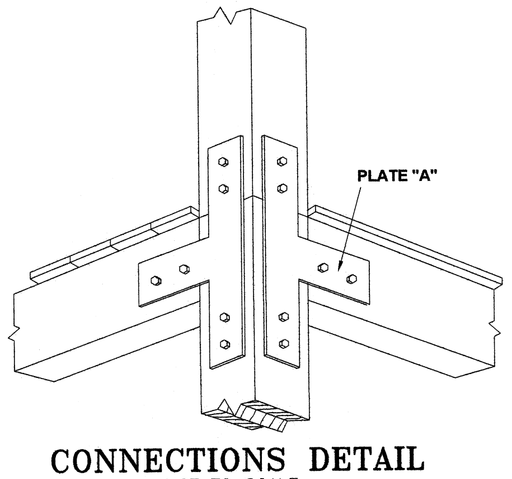

CONNECTIONS DETAIL

NOT TO SCALE

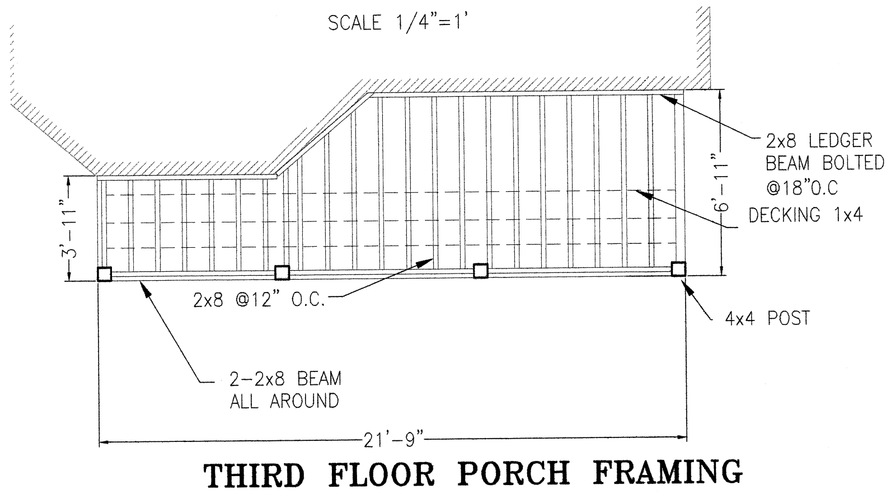

THIRD FLOOR PORCH FRAMING

SCALE 1/4"=1'

COMMONWEALTH OF MASSACHUSETTS K. N. SRINIVASA No. 29428 PROFESSIONAL ENGINEER

10/21/2010

— PREPARED BY —

KALKUNTE ENGINEERING CORPORATION
CONSULTING ENGINEERS
1749 CENTRAL STREET
STOUGHTON, MA 02072
(781) 344-8565

4' 0 4' 8'
SCALE IN FEET 1/8"=1'

FRONT PORCH PLANS

39 JAY STREET
SOMERVILLE, MA

PREPARED FOR: WITOLD POTEMPA & WENDY COLEMAN
276 CLIFTON ST. BELMONT, MA 02478

SCALE	DATE	ACAD FILE	DWG NO.
1/4"=1'	08/10/2010	39 JAY	1

C:\dwg\39 JAY ST. SOMERVILLE\dwg\39 Jay St.dwg, 10/21/2010 12:36:30 PM